THE NETHERLANDS
(NEDERLAND)

EC TYPE-APPROVAL CERTIFICATE

Communication concerning the:

- ~~type-approval~~
- extension of type-approval
- ~~refusal of type-approval~~
- ~~withdrawal of type-approval~~

of a type of a ~~vehicle~~/~~component~~/separate technical unit with regard to Directive 70/221/EEC, as last amended by Directive 2006/20/EC.

Type-approval number	: **e4*70/221*2006/20*0687*01**
Reason for extension	: - New "make" - New name of manufacturer - Addition of a drilling instruction.
Approval mark	: e4 00 0687

SECTION I

0.1.	Make (trade name of manufacturer)	: Alcan, Almet
0.2.	Type and general commercial description(s)	: M5461 / 165 - 04
0.3.	Means of identification of type, if marked on the ~~vehicle~~/~~component~~/ separate technical unit [1]	: By approvalnumber, marked on the type plate.
0.3.1.	Location of that marking	: Rear side, in the middle.
0.4.	Category of vehicle [2]	: N & O
0.5.	Name and address of manufacturer	: Almet Nederland BV. Aluminiumstraat 1 4823AL Breda The Netherlands

JE MAINTIENDRAI
RDW

P.O. Box 777
2700 AT Zoetermeer
The Netherlands

Tel. + 31 (0)79 345 81 43
Fax + 31 (0)79 345 80 43
www.rdw.nl

Vehicle Approval and Information

0.7.	In the case of components and separate technical units, location and method of affixing of the EC approval mark	: Stamped on the type plate
0.8.	Address(es) of assembly plant(s)	: See documentation

SECTION II

1.	Additional information (where applicable)	: see Addendum
2.	Technical service responsible for carrying out the tests	: RDW P.O. Box 777 2700AT Zoetermeer The Netherlands
3.	Date of test report	: 03 Sept. 2007 10 March 2009
4.	Number of test report	: RDW-70/221-0744 RDW-TR-02778
5.	Remarks (if any)	: see Addendum
6.	Place	: Zoetermeer
7.	Date	: 10 March 2009
8.	Signature	D.G. Burger

9. The index to the information package lodged with the approval authority, which may be obtained on request :

Information package: 1 sheet with drilling instructions.

For all additional information, please refer to the information package attached to the original version of this certificate.

---

(1) If the means of identification of type contains characters not relevant to describe the vehicle, component or separate technical unit types covered by this type-approval certificate such characters shall be represented in the documentation by the symbol: "?" (e.g. ABC??123??).

(2) As defined in Annex IIA to Directive 70/156/EEC.

ADDENDUM

to EC type-approval certificate number: e4*70/221*2006/20*0687*01

concerning the type-approval of a separate technical unit with regard to a rear underrun protective device (Directive 70/221/EEC, as last amended by Directive 2006/20/EC).

1.	Additional information	
1.1.	Construction	
1.1.1.	Material	: Aluminium
1.1.2.	Method of affixing	: 4 M10 bolts on each side; see documentation
1.1.3.	Dimension of the device	: See documentation
1.2.	Maximum technically permissible mass of the vehicle on which the device is to be mounted	: Not applicable
1.3.	Restrictions of the use of the device (if any)	: See documentation
5.	Remarks: None	

JE MAINTIENDRAI
RDW

INFORMATION DOCUMENT No 0744

relating to EC type-approval as a separate technical unit with respect of a rear underrun protective device

(Directive 70/221/EEG as last amended by Directive 2006/20/EC)

0.	GENERAL	
0.1.	Make (trade name of manufacturer):	**ALCAN**
0.2.	Type and general commercial description(s):	**M5461 / 165 - 04** **FL29554**
0.5.	Name and adress of manufacturer:	**ALCAN NEDERLAND BV** **Aluminiumstraat 1** **4823 AL Breda** **Netherlands**
0.7.	In the case of components and seperate technical units, location and method of affixing of the EC approval mark:	**rear-side, in the middle, identification-plate**
0.8.	Adress(es) of assembly plant(s):	ALCAN NEDERLAND BV Aluminiumstraat 1 4823 AL Breda - Netherlands
1.	GENERAL CONSTRUCTION CHARACTERISTICS OF THE VEHICLE(S) on which the device is intended to be fitted in so far as they relate to the rear underrun protection (attach photographs and/or drawings):	**see drawing M5461/165_04_EC**
1.1.	Minimum sum of the moments of inertia about the horizontal axis of the chassis side-members in cross-section:	**not relevant**
1.2.	Distance between the chassis side-members at the mounting points of the device:	**min. 1170 mm.** **max. 1350 mm.**
2.	MASS AND DIMENSIONS	
2.1.	Technically permissible maximum laden mass:	**not applicable**
3.	BODYWORK	
3.1.	Full description and/or drawing of the rear underrun protection device (including mounting and fittings):	**see drawing M5461/165_04_EC**

JE MAINTIENDRAI
RDW

Breda, 25.09.2007 (date, file)

(1:10)

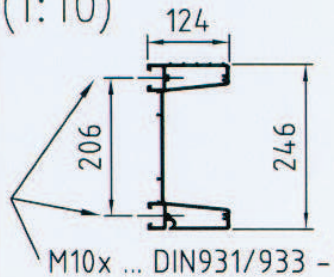

Bumper profile
FL29554
Material: aluminium
Alloy min.: 6060

M10x ... DIN931/933 - 8.8
bolt fitting (steel)

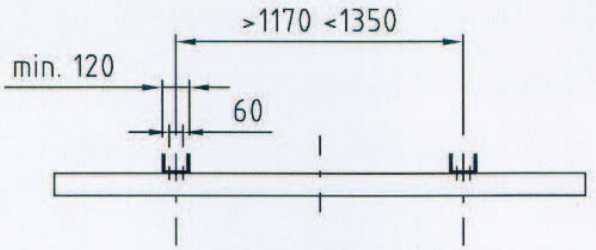

M10x ... DIN933-8.8 (bolt-steel)
Nut-fitting AN880

Nut-fitting M10 aluminium
AN880
Alloy: alu - EN6005A

(1:3)

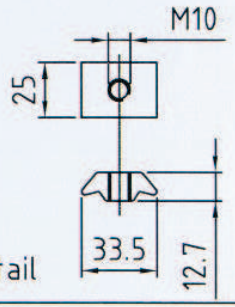

Montagedetail

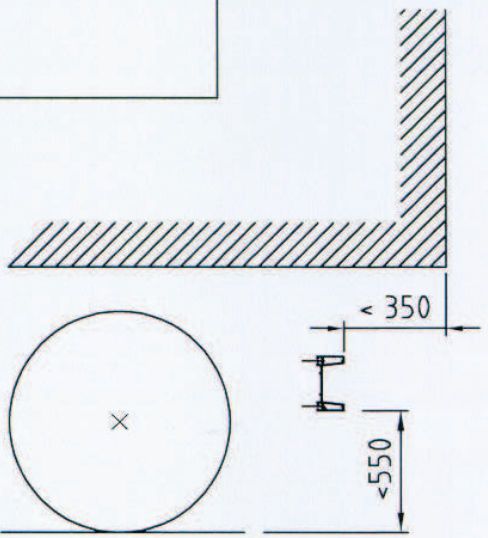

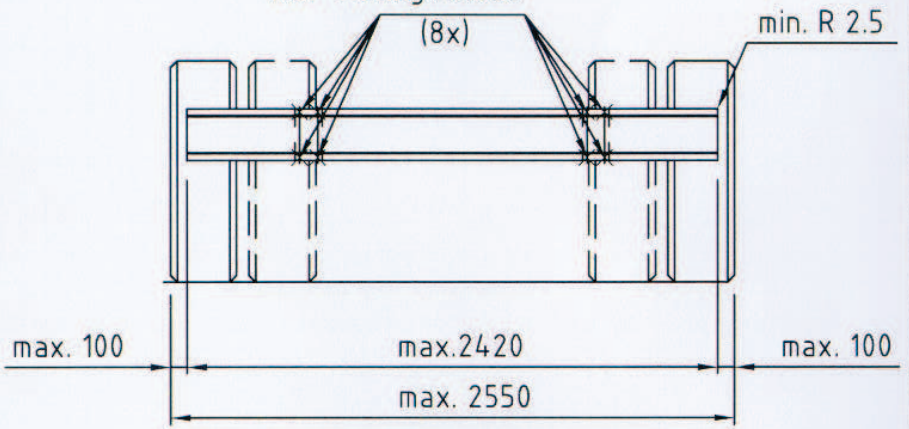

EC identification plate
rear-side, in the middle

Approved for vehicle class N, O, M

RDW

Drawing name:	Bumper profile FL29554
Date	30-07-2007
Drawn by	Rien Schrauwen
Scale	1:30
Measure units	mm.
Drawing no.	M5461_165_04_EC

ALCAN

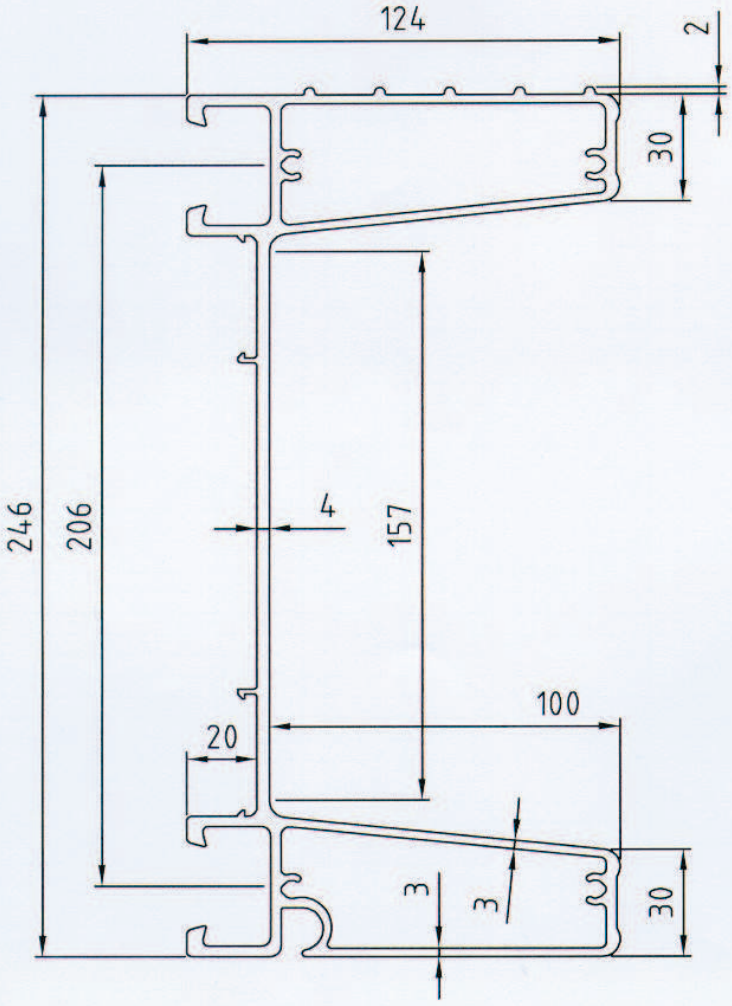

Profile: FL29554

Alloy: Aluminium
EN6060

Deze tekening is en blijft eigendom van Alcan Nederland B.V. en mag zonder haar schriftelijke toestemming niet worden vermenigvuldigd of gekopieerd noch aan derden ter inzage worden gegeven. Alcan Nederland B.V. is niet verantwoordelijk voor eventuele verbeteringen en of veranderingen.

Wijziging			

Benaming: Bumperprofile FL29554

Datum	30-07-2007		
Getekend	Rien Schrauwen		
Schaal	1:2		
Tek.nr.	M5461_165_04_prf		

Alcan Nederland B.V.
☎ 076-5425200
FAX 076-5418028

ALCAN

s.a. Alcan Belgium n.v.
☎ (02) 332 29 00
FAX (02) 332 00 28

Example of type plate

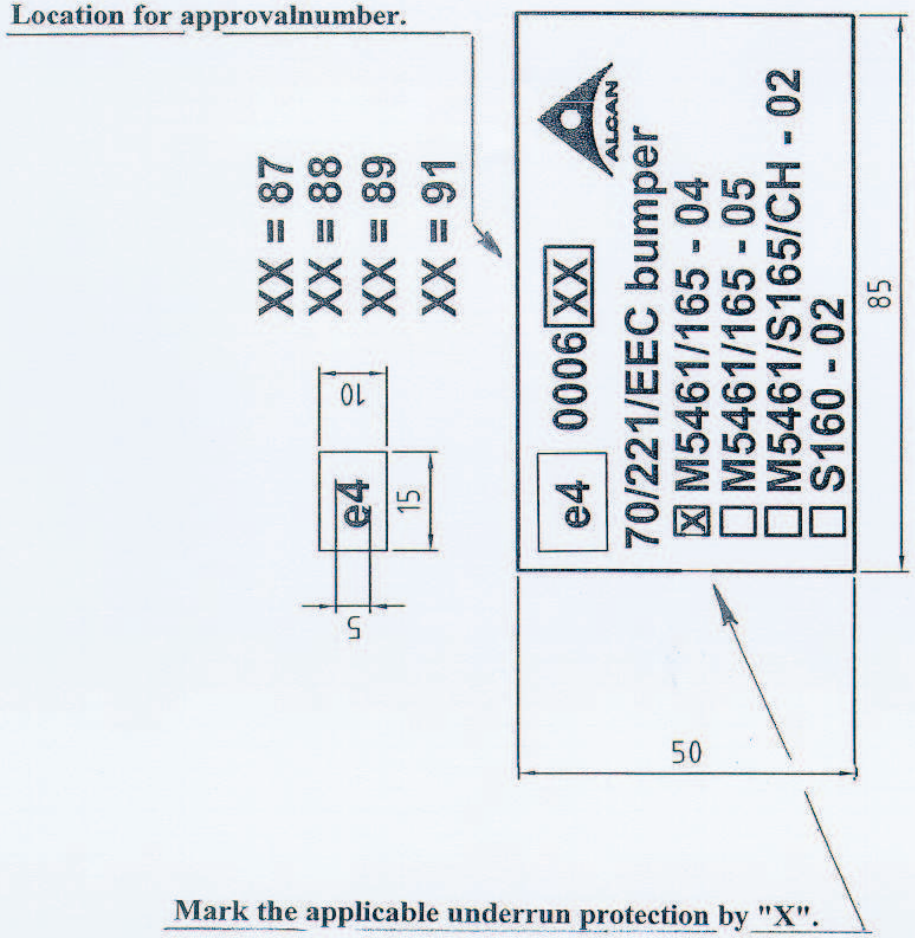

JE MAINTIENDRAI
RDW

Drilling instructions: **M5461 / 165 - 04**

When the center-distance between the two supports is less than 1220 mm.
No drilling is allowed in dashed area. (see fig. 1.)
Drilling in top or bottom flange is never allowed, except in area A, not more than 100 mm. from end of profile (left and right).

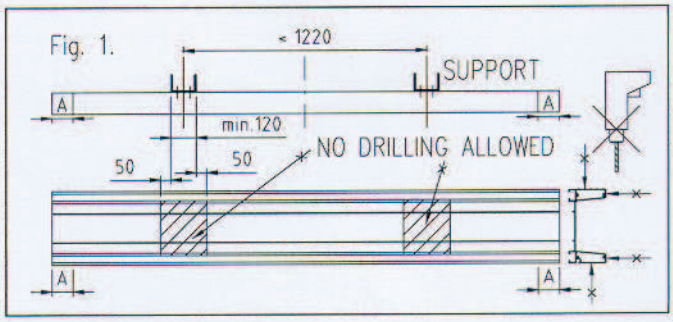

For the area to the outside of the centre of the supports:

1. Maximum amount of holes to be drilled / punched on one side:

Diameter of hole (round)	Or area of hole in case of other shape.	Maximum amount
≤ Ø 50 mm.	≤ 3250 mm²	3
≤ Ø 30 mm.	≤ 2100 mm²	4
≤ Ø 20 mm.	≤ 1400 mm²	5
≤ Ø 10 mm.	≤ 700 mm²	8
≤ Ø 5 mm.	≤ 350 mm²	10

On the outside of the other support the same amount of holes may be drilled,but to a different pattern.

For the area between the centre of the two supports:

2. Maximum amount of holes to be drilled / punched:

Diameter of hole (round)	Or area of hole in case of other shape.	Maximum amount
≤ Ø 50 mm.	≤ 3250 mm²	2
≤ Ø 30 mm.	≤ 2100 mm²	4
≤ Ø 20 mm.	≤ 1400 mm²	6
≤ Ø 10 mm.	≤ 700 mm²	10
≤ Ø 5 mm.	≤ 350 mm²	14

3.
The distance between two holes shall never be less than 1,5 times the diameter of the smallest hole:

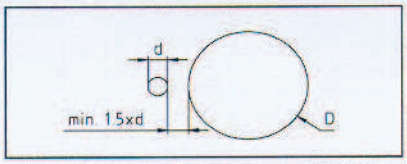

4a.
In any cross-section (vertical) of the rear underrun protection the amount of material removed shall never be more than 50 mm.

4b.
In any cross-section (horizontal) of the rear underrun protection the amount of material removed shall never be more than 75 mm.

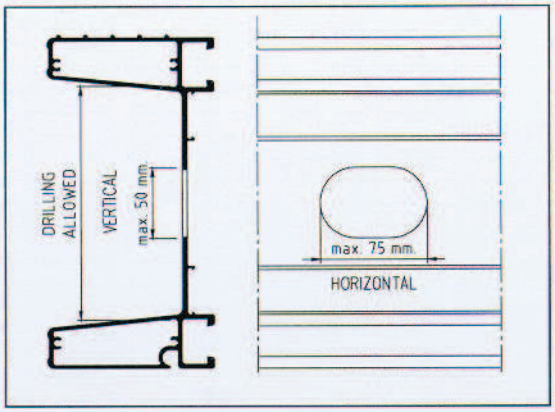

JE MAINTIENDRAI
RDW